OMCAN

COOKING EQUIPMENT

HOTDOG & SNEEZE GUARDS (OPTIONAL)

Item: 44131 **Model: FW-CN-0005-E**	**Item: 44132** **Model: FW-CN-0007-E**	**Item: 44133** **Model: FW-CN-0009-E**
Item: 44152 **(Sneeze guard for 44131)**	**Item: 44153** **(Sneeze guard for 44132)**	**Item: 44154** **(Sneeze guard for 44133)**

FEATURES

- Made of stainless steel
- Individual temperature control knobs (0-250°C) for front and back
- Removable drip tray for excessive oil and food
- Non-skid rubber feet prevent sliding
- Easy to use and clean
- Perfect for movie theater, snack bar, farmer market, sport events, concessions stand and even your kitchen

1 YEAR **WARRANTY**
PARTS AND LABOR

Authorized Dealer

MADE IN CHINA

COOKING EQUIPMENT

HOTDOG ROLLER - 5 ROLLERS

Rear side

TECHNICAL DRAWING WITH DIMENSIONS

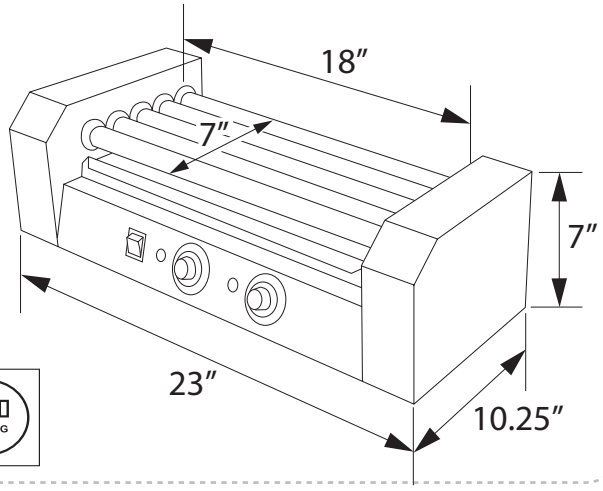

NEMA
5 - 15
125 VAC / 15 AMP

Individual temperature controls

5 Stainless steel rollers

Optional sneeze guard

TECHNICAL SPECIFICATION	
ITEM NUMBER	44131
MODEL	FW-CN-0005-E
NUMBER OF ROLLERS	5
CAPACITY (QTY. OF HOTDOG)	12
LENGTH OF ROLLERS	17”/ 431.8 mm
TEMPERATURE (FRONT & BACK)	0 - 250°C/ 32 - 482°F
ELECTRICAL	110v/60hz/1ph
POWER	0.7 kW
NET WEIGHT	15 lbs/ 6.8 kg.
GROSS WEIGHT	16.5 lbs./ 7.5 kg.
NET DIMENSIONS	10.25” x 23” x 7”/ 260.4 x 584 x 178 mm
GROSS DIMENSIONS	23.6” x 12” x 7” / 600 x 300 x 178 mm
OPTIONAL ITEM	44152 (Sneeze guard)

OMCAN INC.

Telephone: 1-800-465-0234
Fax: (905) 607-0234
E-mail: sales@omcan.com
Website: www.omcan.com

CELEBRATING MORE THAN 60 YEARS OF SERVICE 60 EST. 1951

Follow us to keep up to date with the latest news and offers

2015.E.O.E

COOKING EQUIPMENT

HOTDOG ROLLER - 7 ROLLERS

Rear side

TECHNICAL DRAWING WITH DIMENSIONS

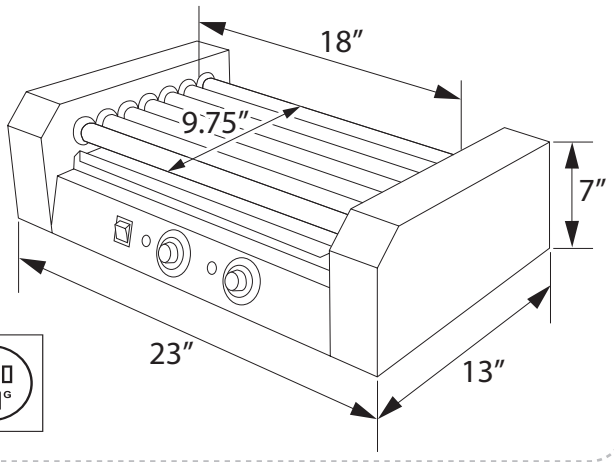

NEMA
5 - 15
125 VAC / 15 AMP

Individual temperature controls

7 Stainless steel rollers

TECHNICAL SPECIFICATION	
ITEM NUMBER	44132
MODEL	FW-CN-0007-E
NUMBER OF ROLLERS	7
CAPACITY (QTY. OF HOTDOG)	18
LENGTH OF ROLLERS	17”/ 431.8 mm
TEMPERATURE (FRONT & BACK)	0 - 250°C/ 32 - 482°F
ELECTRICAL	110v/60hz/1ph
POWER	0.9 kW
NET WEIGHT	19 lbs./ 8.6 kg.
GROSS WEIGHT	20 lbs./ 9 kg.
NET DIMENSIONS	13” x 23” x 7”/ 330 x 584 x 178 mm
GROSS DIMENSIONS	24” x 19” x 7”/ 609.6 x 482.6 x 178 mm
OPTIONAL ITEM	44153 (Sneeze guard)

Optional sneeze guard

OMCAN INC.

Telephone: 1-800-465-0234
Fax: (905) 607-0234
E-mail: sales@omcan.com
Website: www.omcan.com

CELEBRATING MORE THAN 60 YEARS OF SERVICE
60
EST. 1951

Follow us to keep up to date with the latest news and offers

2015.E.O.E

COOKING EQUIPMENT

HOTDOG ROLLER - 9 ROLLERS

Rear side

TECHNICAL DRAWING WITH DIMENSIONS

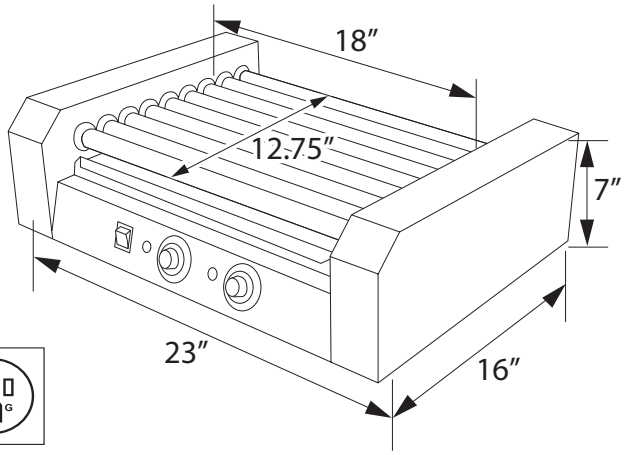

NEMA
5 - 15
125 VAC / 15 AMP

Individual temperature controls

9 Stainless steel rollers

Optional sneeze guard

TECHNICAL SPECIFICATION	
ITEM NUMBER	44133
MODEL	FW-CN-0009-E
NUMBER OF ROLLERS	9
CAPACITY (QTY. OF HOTDOG)	24
LENGTH OF ROLLERS	17”/ 431.8 mm
TEMPERATURE (FRONT & BACK)	0 - 250°C/ 32 - 482°F
ELECTRICAL	110v/60hz/1ph
POWER	1.2 kW
NET WEIGHT	24 lbs./ 10.88 kg.
GROSS WEIGHT	25 lbs/ 11 kg.
NET DIMENSIONS	16” x 23” x 7”/ 406 x 584 x 178 mm
GROSS DIMENSIONS	24” x 19 “x 7”/ 609.6 x 482.6 x 178 mm
OPTIONAL ITEM	44154 (Sneeze guard)

OMCAN INC.

Telephone: 1-800-465-0234
Fax: (905) 607-0234
E-mail: sales@omcan.com
Website: www.omcan.com

CELEBRATING MORE THAN 60 YEARS OF SERVICE
60
EST. 1951

Follow us to keep up to date with the latest news and offers

2015.E.O.E