REFRIGERATOR MANUFACTURER
Turbo air
more durable, efficient, beautiful

4184 E. Conant St.
Long Beach, CA 90808
Tel. 310-900-1000
Fax. 310-900-1077
www.turboairinc.com

Project :	
Model # :	
Item # :	Qty :
Available W/H :	
Approval :	

Swing Door Merchandisers

Glass Door Merchandisers
Refrigerators

Model : TGM-22RV-N6
TGM-22RVB-N6

FEATURES & BENEFITS

- ***Hydrocarbon refrigerants (R-600a)***
  With innovative and eco-friendly technology, Turbo Air brings you hydrocarbon refrigerators designed to meet the new standards of the EPA and DOE in 2017. Hydrocarbon refrigerants do not deplete the ozone layer and have very low contribution to global warming (ODP-0, GWP-3).

- ***Hot gas condensate system***
  Through Turbo Air's creative innovation, the condensate system surfaces have been specially treated to resist corrosion. This not only increases efficiency without the risk of refrigerant leakage from corrosion, but also prevents the overflow of condensate water.

- ***LED advertising panel***
  LED lighting offers 5 times longer lasting life than fluorescents and conserves energy as well.

- ***Double pane glass doors with Low-E glass***
  Energy saving double pane glass doors are equipped with Low-emissivity glass, which reduces outer heat gain and decreases energy consumption. It enhances energy efficiency and minimizes condensation. Lightweight door construction also reduces door maintenance and bushing wear, which in turn facilitates smoother door opening.

- ***High-density polyurethane insulation***
  The entire cabinet structure and solid doors are foamed-in-place using high density, CFC free polyurethane insulation.

- ***Adjustable, heavy duty, PE (polyethylene) coated wire shelves***

- ***LED lighting interior***

- ***Refrigerator holds 33°F ~ 38°F for the best in beverage preservation***

NATURAL Refrigerant

Model	Swing Door	CU./FT.	#of Shelves	HP	AMPS	Crated Weight (lbs.)	L x D* x H (inches)
TGM-22RV(B)-N6	1	20.3	4	1/5	2.2	243	28 3/4 x 27 5/8 x 79 7/8

Ver.20171019

* Depth does not include 1-3/8" for door handle.

Swing Door Merchandisers

Glass Door Merchandisers
Refrigerators

Model : TGM-22RV(B)-N6

ELECTRICAL DATA	
Voltage	115/60/1
Plug Type	NEMA 5-15P
Full Load Amperes	2.2
Compressor HP	1/5
Cord Length (ft.)	6
Refrigerant	R-600a
DIMENSIONAL DATA	
# of Doors	1
Net Capacity (cu. ft.)	20.3
Ext. Length Overall (in.)	28 3/4 (732mm)
Ext. Depth Overall (in.)*	27 5/8 (702mm)
Ext. Height Overall (in.)	79 7/8 (2028mm)
Int. Length Overall (in.)	24 1/8 (613mm)
Int. Depth Overall (in.)	23 5/8 (600mm)
Int. Height Overall (in.)	62 1/8 (1580mm)
Net Weight (lbs.)	225
Gross Weight (lbs.)	243
# of Shelves	4
Shelf Size (LxD) (in.)	25 1/2 x 19 3/8
Bottle Capacity	280 (full)

Design and specifications subject to change without notice.
Actual shipping weight may differ due to extra packing materials for product protection.
* Depth does not include 1-3/8" for door handle.

PLAN VIEW

(unit : inch)

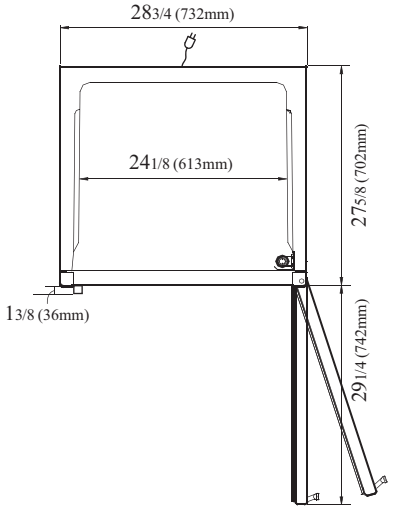

PLAN VIEW

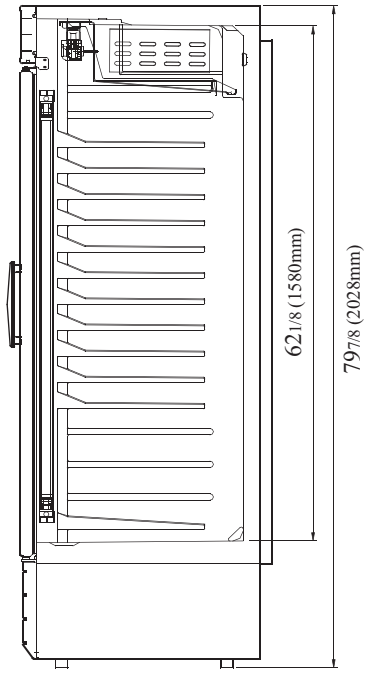

SIDE VIEW

■ **WARRANTY :** **2 Year Parts and Labor Warranty**
Additional 3 Year Warranty on Compressor

- ***Anti-corrosion coated evaporator***
- ***White color cabinet & black color frame on door***
- ***Black color cabinet available***
- ***Gravity feed shelf available (optional)***
- ***Price tag channel available (optional)***

■ OPTIONAL ACCESSORIES :

- ❑ 2.5" caster ½" diameter & 13 TPI (special stem nuts rquired, sold in separate): 30265H0100 (non-brake), 30265H0200 (w/ brake)
- ❑ 4" caster, ½" diameter & 13 TPI (special stem nuts rquired, sold in separate): G8F6500101 (non-brake), G8F6500201 (w/ brake)
- ❑ Special stem nut for caster installation (EA): 30260K0200 (1/2", 13 thds)
- ❑ Additional PE coated wire shelf: 30278H0600
- ❑ Gravity feed shelf: 30278H0200
- ❑ Price tag channel: P0122K5200 (21"L)

Ver.20171019

■ **Turbo Air** : 800-627-0032 ■ **GK** : 800-500-3519
■ **Warranty** : 800-381-7770 ■ **AC** : 888-900-1002