SUPER JETSTAR® 8oz. POPCORN POPPERS

Model 86S & 86SS

Features/Benefits:

- ★ Combine Star's Super *JetStar* 8oz. popcorn poppers and Chief's Choice quality popcorn to bring the smell, taste and fun to the party.
- ★ Requires only 19-1/2" of counter space to fit almost any where.
- ★ Stainless steel style fits any decor and is easy to clean.
- ★ Pops 170 one ounce servings per hour of Star's quality Chief's Choice brand popcorn (contact factory for details).
- ★ Nickel plated 8 oz. steel kettle provides maximum popping performance.
- ★ Magnetic catch holds one-piece kettle lid up for easy loading and unloading of Chief's Choice popcorn.
- ★ Swing up/down kettle design allows easy dispensing of popped corn into the cabinet and is easy to clean.
- ★ A 50 watt warming element under stainless steel corn deck keeps pop corn fresh and crisp when you want to snack.
- ★ Cabinet is constructed of 1/8" thick tempered glass panels with four full length aluminum corner posts for stability and maintenance free operation.
- ★ Heavy gauge clear plexiglass doors and full length aluminum hinges with magnetic catch stands up to constant use.
- ★ Clear lexan drop panel provides greater visibility for merchandising popcorn.
- ★ Stainless steel old maid drawer allows quick and easy removal of old maids.
- ★ Eye level 2 switch control panel :
  Top Switch engages motor and kettle heat
  Bottom Switch engages light and corn deck
- ★ A 75 watt display light highlights popcorn and builds impulse sales.
- ★ Attractive colorful popcorn graphics makes popper a perfect addition to any foodservice operation.
- ★ Optional sneeze guards for self-serve operations.
- ★ Cabinet cleaning is a snap with warm soapy water.

Model 86S

Model 86SS

Applications:

The Super Jet Star popcorn poppers are perfect for convenience stores, concessions, recreational facilities and fun centers, restaurants, bars, chains or wherever you want to pop and dispense delicious popcorn.

Quality Construction:

Super Jet Star is constructed of solid extruded aluminum corner posts, 1/8" thick tempered glass panels and two 3/16" thick plexiglass doors with full length aluminum hinges to stand up to commercial use. Outfitted with 1000 watt, 8oz. capacity nickel plated steel popping kettle with stainless steel exterior shell. A wire cage protects the 75 watt display lamp. A 50 watt warming element under stainless steel corn deck and old maid drawer are standard. Poppers shipped complete with a 6' lead in cord with NEMA 5-15P. A CEE7-7 plug is available for 230V units.

Warranty:

Super Jet Star poppers are covered by Star's two year parts and labor warranty.

Star Manufacturing International Inc. - 10 Sunnen Drive - P.O. Box 430129 - St. Louis, MO 63143-3800
Phone: (800) 264-7827 - FAX: (800) 264-6666 - www.star-mfg.com

Star Manufacturing International, Inc

Super Jet Star® 8 oz Poppers

SUPER JETSTAR® 8oz. POPCORN POPPERS

Model 86S & 86SS

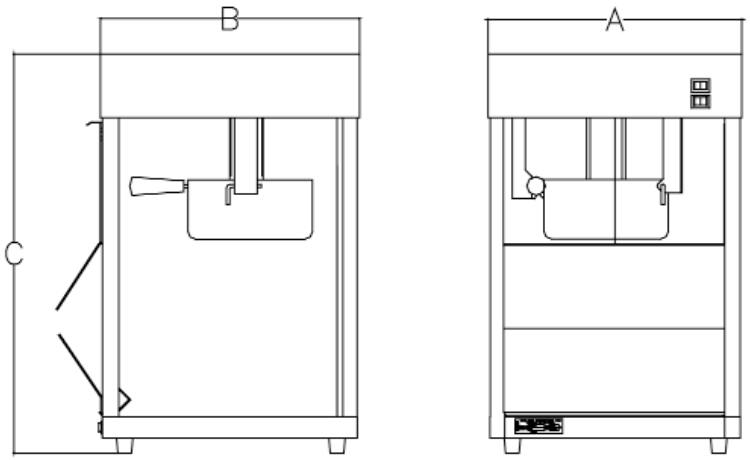

Specifications

Model No.	Dimensions (A) Width Inches (cm)	(B) Depth Inches (cm)	(C) Height Inches (cm)	Approximate Weight Installed lbs (kg)	Shipping lbs (kg)
86S & 86SS	19-1/2 (45.5)	14-1/2 (36.2)	30-1/2 (77.5)	54 (24.5)	65 (29.5)

Electronic Data

Model No.	Voltage	Wattage	Amps	Kettle Capacity	Serving Per Hour
86S & 86SS	120V	1197	10.0	8 oz.	170 one ounces
	230V	1100	4.8	8 oz.	170 one ounces

Typical Specifications

Super JetStar Popper Popcorn machine is constructed of extruded aluminum corner posts, has 1/8" thick tempered glass panels and two 3/16" thick plexiglass doors with full length aluminum hinges that provide easy access to the interior of the cabinet. A clear lexan serving drop panel provides unobstructed merchandising. Popcorn machine is supplied with a 1000 watt 8 oz. capacity nickel plated steel popping kettle with a stainless steel exterior shell. A wire cage protected display lamp, heated stainless steel corn pan, and stainless steel old maid drawer are standard. Poppers are complete with a 6' lead in cord with NEMA 5-15 plug. Unit is approved by UL, NSF and CSA. Printed in the U.S.A.

Due to periodic changes in designs, methods, procedures, policies and regulations, the specifications contained in this sheet are subject to change without notice. While Star Manufacturing exercises good faith efforts to provide information that is accurate, we are not responsible for errors or omissions in information provided or conclusions reached as a result of using the specifications. By using the information provided, the user assumes all risks in connection with such use.

Star Manufacturing International Inc. - 10 Sunnen Drive - P.O. Box 430129 - St. Louis, MO 63143-3800

Phone: (800) 264-7827 - FAX: (800) 264-6666 - www.star-mfg.com