Profit from the Eagle Advantage®

Specification Sheet

Item No.: _____
Project No.: _____
S.I.S. No.: _____

Racks

Short Form Specifications

Eagle Table Mounted Pot/Pan Rack, model _____. Constructed of 3/16″ x 2″ (aluminum or stainless steel) flat bar, bolted together. Triple bar construction, furnished with one stainless steel double prong sliding pot hook every 12″. 1⅝″ O.D. stainless steel tubular supports extend through table and are secured to under shelf. Available with optional 12″ wide 16/304 stainless steel shelf.

Eagle Ceiling Mounted Pot/Pan Rack, model _____. Constructed of 3/16″ x 2″ (aluminum or stainless steel) flat bar, bolted together. Triple bar construction, furnished with one stainless steel double prong sliding pot hook every 12″. Provided with plated chain hangars for ceiling suspension.

Eagle Wall Mounted Pot/Pan Rack, model _____. Constructed of 3/16″ x 2″ (aluminum or stainless steel) flat bar bolted together. Furnished with one stainless steel double prong sliding pot hook every 12″, and provided with stainless steel mounting brackets.

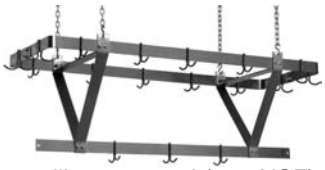

ceiling mounted (non-NSF)

wall mounted

table mounted

MODELS:

❑ ***CM36****	❑ ***TM36****	❑ ***WM36****
❑ ***CM48****	❑ ***TM48****	❑ ***WM48****
❑ ***CM60****	❑ ***TM60****	❑ ***WM60****
❑ ***CM72****	❑ ***TM72****	❑ ***WM72****
❑ ***CM84****	❑ ***TM84****	❑ ***WM84****
❑ ***CM96****	❑ ***TM96****	❑ ***WM96****
❑ ***CM108****	❑ ***TM108****	❑ ***WM108****
❑ ***CM120****	❑ ***TM120****	❑ ***WM120****
❑ ***CM132****	❑ ***TM132****	❑ ***WM132****
❑ ***CM144****	❑ ***TM144****	❑ ***WM144****

** See charts on back for full model numbers.*

Ceiling mounted (non-NSF)
- Racks are triple-bar construction.
- Supported with plated chain hangers supplied.
- Available in stainless steel or aluminum.
- Provided with double-pronged pot hooks.

Wall Mounted
- Racks are double-bar construction.
- Supplied with die-formed stainless steel brackets.
- Available in stainless steel or aluminum.
- Provided with double-pronged pot hooks.

Table Mounted
- Racks are triple-bar construction.
- Front-to-back adjustable crossbracing, plus adjustable undershelf.
- 1⅝″ (41mm) tubular stainless steel supports extend through tabletop and are secured to adjustable undershelf. Units 96″ (2438mm) and longer have three supports.
- Provided with double-pronged pot hooks.
- Available in stainless steel or aluminum.

Options / Accessories
- ❑ Additional sliding hooks
- ❑ All-welded construction
- ❑ 12″-wide adjustable shelves (for Table Mounted Racks)

Certifications / Approvals

NSF

AutoQuotes

KCL

EAGLE GROUP
100 Industrial Boulevard, Clayton, DE 19938-8903 USA
Phone: 302-653-3000 • Fax: 302-653-2065
www.eaglegrp.com

Foodservice Division: Phone 800-441-8440
MHC/Retail Display Divisions: Phone 800-637-5100

For custom configuration or fabrication needs, contact our **SpecFAB® Division.**
Phone: 302-653-3000 • Fax: 302-653-3091 • e-mail: specfab@eaglegrp.com

Spec sheets available for viewing, printing or downloading from our online literature library at *www.eaglegrp.com*

Eagle Foodservice Equipment, Eagle MHC, SpecFAB®, and Retail Display are divisions of Eagle Group. ©2008 by the Eagle Group

EAGLE GROUP®
Profit from the Eagle Advantage®

Item No.: _____
Project No.: _____
S.I.S. No.: _____

Table Mounted Racks

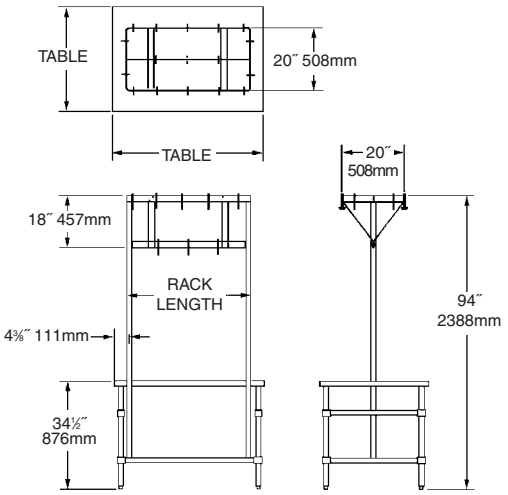

ALUMINUM model #	weight lbs.	weight kg	STAINLESS STEEL model #	weight lbs.	weight kg	rack length in.	rack length mm	fits table length in.	fits table length mm
TM36APR	38	17.2	*TM36PR*	50	22.7	28″	711	36″	914
TM48APR	42	19.1	*TM48PR*	57	25.9	40″	1016	48″	1219
TM60APR	46	20.9	*TM60PR*	64	29.0	52″	1321	60″	1524
TM72APR	50	22.7	*TM72PR*	70	31.8	64″	1626	72″	1829
TM84APR	54	24.5	*TM84PR*	77	34.9	76″	1930	84″	2134
TM96APR	58	26.3	*TM96PR*	83	37.6	88″	2235	96″	2438
TM108APR	62	28.1	*TM108PR*	89	40.4	100″	2540	108″	2743
TM120APR	66	29.9	*TM120PR*	95	43.1	112″	2845	120″	3048
TM132APR	71	32.2	*TM132PR*	102	46.3	124″	3150	132″	3353
TM144APR	76	34.5	*TM144PR*	109	49.4	136″	3454	144″	3658

Wall Mounted Racks

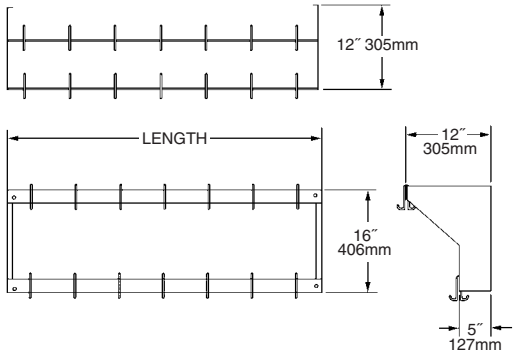

ALUMINUM model #	weight lbs.	weight kg	STAINLESS STEEL model #	weight lbs.	weight kg	rack length in.	rack length mm
WM36APR	13	5.8	*WM36PR*	18	8.2	36″	914
WM48APR	15	6.8	*WM48PR*	22	10.0	48″	1219
WM60APR	17	7.7	*WM60PR*	26	11.8	60″	1524
WM72APR	19	8.6	*WM72PR*	29	13.2	72″	1829
WM84APR	21	9.5	*WM84PR*	33	15.0	84″	2134
WM96APR	23	10.4	*WM96PR*	37	16.8	96″	2438
WM108APR	25	11.3	*WM108PR*	41	18.6	108″	2743
WM120APR	28	12.7	*WM120PR*	45	20.4	120″	3048
WM132APR	31	14.1	*WM132PR*	50	22.7	132″	3353
WM144APR	34	15.4	*WM144PR*	55	24.9	144″	3658

Ceiling Mounted Racks

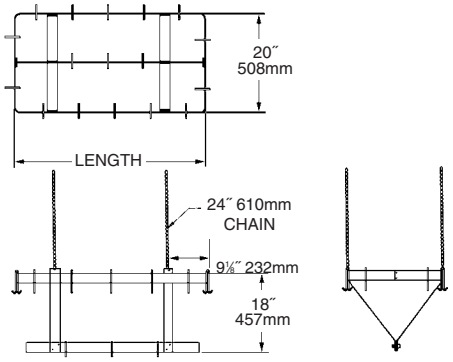

ALUMINUM model #	weight lbs.	weight kg	STAINLESS STEEL model #	weight lbs.	weight kg	rack length in.	rack length mm	fits table length in.	fits table length mm
CM36APR	28	12.7	*CM36PR*	41	18.6	28″	711	36″	914
CM48APR	32	14.5	*CM48PR*	48	21.8	40″	1016	48″	1219
CM60APR	36	16.3	*CM60PR*	54	24.5	52″	1321	60″	1524
CM72APR	40	18.1	*CM72PR*	60	27.2	64″	1626	72″	1829
CM84APR	44	20.0	*CM84PR*	67	30.4	76″	1930	84″	2134
CM96APR	48	21.8	*CM96PR*	74	33.6	88″	2235	96″	2438
CM108APR	53	24.0	*CM108PR*	81	36.7	100″	2540	108″	2743
CM120APR	58	26.3	*CM120PR*	87	39.5	112″	2845	120″	3048
CM132APR	63	28.6	*CM132PR*	94	42.6	124″	3150	132″	3353
CM144APR	68	30.8	*CM144PR*	101	45.8	136″	3454	144″	3658

EAGLE GROUP
100 Industrial Boulevard, Clayton, DE 19938-8903 USA
Phone: 302-653-3000 • Fax: 302-653-2065
www.eaglegrp.com

Foodservice Division: Phone 800-441-8440
MHC/Retail Display Divisions: Phone 800-637-5100

Printed in U.S.A.
©2008 by Eagle Group
Rev. 12/08

Spec sheets available for viewing, printing or downloading from our online literature library at *www.eaglegrp.com*

Although every attempt has been made to ensure the accuracy of the information provided, we cannot be held responsible for typographical or printing errors. Information and specifications are subject to change without notice. Please confirm at time of order.