EAGLE GROUP®

Profit from the Eagle Advantage®

Specification Sheet

Item No.: _____

Project No.: _____

S.I.S. No.: _____

Worktables with Backsplash and Galvanized Base with Undershelf —Budget Series

Short Form Specifications

Eagle worktables, Budget series model _____. Top to be constructed of heavy gauge type 430 stainless steel with 1½˝ roll on front, 4½˝ backsplash, and sides turned down 90˚. Undershelf to be adjustable and constructed of heavy gauge galvanized steel. Top reinforced with welded hat channels, and sound deadened. Constructed with uni-lok® patented gusset system with the gussets recessed into the hat channels to reduce lateral movement. Legs to be 1⅝˝ O.D. galvanized tubing, with galvanized gussets and 1˝ hi-impact plastic bullet feet.

worktable with backsplash and undershelf

Patented uni-lok® System
(Patent No. 5,165,349)

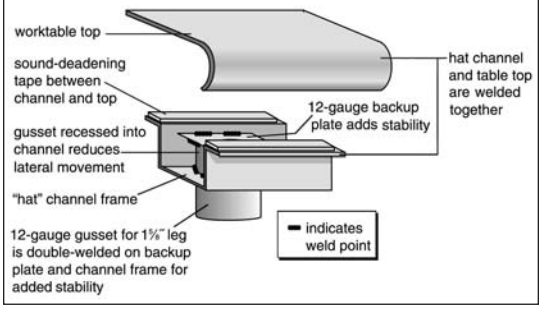

MODELS:

❑ *T2424B-BS*	❑ *T24108B-BS*	❑ *T3072B-BS*	❑ *T3660B-BS*
❑ *T2430B-BS*	❑ *T24120B-BS*	❑ *T3084B-BS*	❑ *T3672B-BS*
❑ *T2436B-BS*	❑ *T24132B-BS*	❑ *T3096B-BS*	❑ *T3684B-BS*
❑ *T2448B-BS*	❑ *T24144B-BS*	❑ *T30108B-BS*	❑ *T3696B-BS*
❑ *T2460B-BS*	❑ *T3030B-BS*	❑ *T30120B-BS*	❑ *T36108B-BS*
❑ *T2472B-BS*	❑ *T3036B-BS*	❑ *T30132B-BS*	❑ *T36120B-BS*
❑ *T2484B-BS*	❑ *T3048B-BS*	❑ *T30144B-BS*	❑ *T36132B-BS*
❑ *T2496B-BS*	❑ *T3060B-BS*	❑ *T3648B-BS*	❑ *T36144B-BS*

Tabletop

- Patented uni-lok® gusset system (patent #5,165,349): gussets are recessed into hat channel, reducing lateral movement.
- Top reinforced with welded-on hat channel.
- Sound-deadened between top and channels.
- 4½˝ (114mm)-high 90˚ backsplash with 1˝ (25mm) turn at 90˚.
- 1½˝ (38mm)-diameter 180˚ rolled edge on front. Ends are turned down 90˚, providing for flush installations when required.
- Heavy gauge type 430 polished stainless steel.

Adjustable Undershelf

- Heavy gauge, galvanized.
- Gusset welded to each corner.

Legs—1⅝˝ (41mm)-diameter

- Tables 96˝ (2438mm) and longer come with six legs or more.
- Heavy gauge galvanized steel.
- 1˝ (25mm) adjustable hi-impact plastic feet.

Options / Accessories

- ❑ Drawer
- ❑ Lock
- ❑ Casters
- ❑ Stainless steel bullet feet
- ❑ Overshelves
- ❑ Duplex receptacles
- ❑ Pot rack
- ❑ Sink
- ❑ Additional undershelf
- ❑ Stabilizer Bar (for 30˝- and 36˝-wide tables)

Certifications / Approvals

NSF

AUTOQUOTES

KCL

EAGLE GROUP
100 Industrial Boulevard, Clayton, DE 19938-8903 USA
Phone: 302-653-3000 • Fax: 302-653-2065
www.eaglegrp.com

Foodservice Division: Phone 800-441-8440
MHC/Retail Display Divisions: Phone 800-637-5100

For custom configuration or fabrication needs, contact our **SpecFAB® Division.**
Phone: 302-653-3000 • Fax: 302-653-3091 • e-mail: specfab@eaglegrp.com

Spec sheets available for viewing, printing or downloading from our online literature library at *www.eaglegrp.com*

Eagle Foodservice Equipment, Eagle MHC, SpecFAB®, and Retail Display are divisions of Eagle Group. ©2008 by the Eagle Group

EAGLE GROUP®
Profit from the Eagle Advantage®

Item No.: _____
Project No.: _____
S.I.S. No.: _____

Worktables with Backsplash and Galvanized Base with Undershelf—Budget Series

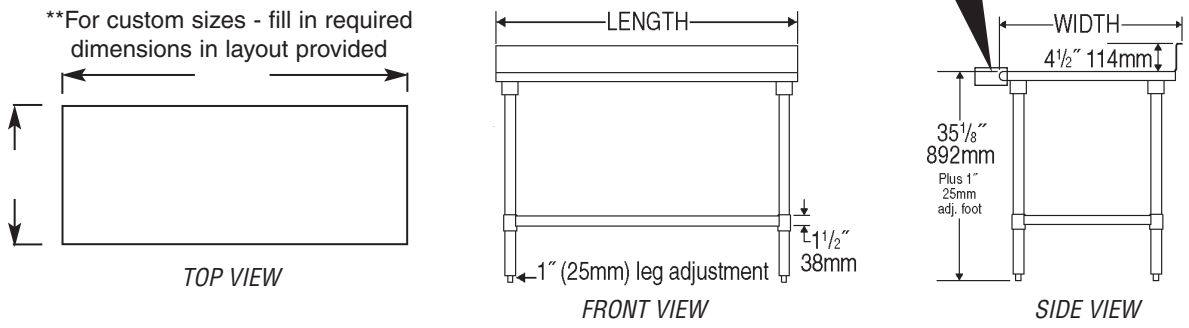

model #	# of legs	width in.	width mm	length in.	length mm	weight lbs.	weight kg
T2424B-BS	4	24″	610	24″	610	43	19.5
T2430B-BS	4	24″	610	30″	762	48	21.8
T2436B-BS	4	24″	610	36″	914	53	24.0
T2448B-BS	4	24″	610	48″	1219	63	28.6
T2460B-BS	4	24″	610	60″	1524	73	33.1
T2472B-BS	4	24″	610	72″	1829	85	38.6
T2484B-BS	4	24″	610	84″	2134	97	44.0
T2496B-BS	6	24″	610	96″	2438	114	51.7
T24108B-BS	6	24″	610	108″	2743	142	64.4
T24120B-BS	6	24″	610	120″	3048	154	69.9
T24132B-BS	8	24″	610	132″	3353	166	75.3
T24144B-BS	8	24″	610	144″	3658	178	80.7
T3030B-BS	4	30″	762	30″	762	50	22.7
T3036B-BS	4	30″	762	36″	914	53	24.0
T3048B-BS	4	30″	762	48″	1219	70	31.8
T3060B-BS	4	30″	762	60″	1524	81	36.7
T3072B-BS	4	30″	762	72″	1829	94	42.6
T3084B-BS	4	30″	762	84″	2134	108	49.0
T3096B-BS	6	30″	762	96″	2438	130	59.0
T30108B-BS	6	30″	762	108″	2743	150	68.0
T30120B-BS	6	30″	762	120″	3048	170	77.1
T30132B-BS	8	30″	762	132″	3353	188	85.3
T30144B-BS	8	30″	762	144″	3658	207	93.9
T3648B-BS	4	36″	914	48″	1219	77	34.9
T3660B-BS	4	36″	914	60″	1524	90	40.8
T3672B-BS	4	36″	914	72″	1829	106	48.1
T3684B-BS	4	36″	914	84″	2134	123	55.8
T3696B-BS	6	36″	914	96″	2438	132	59.9
T36108B-BS	6	36″	914	108″	2743	169	76.7
T36120B-BS	6	36″	914	120″	3048	192	87.1
T36132B-BS	8	36″	914	132″	3353	216	98.0
T36144B-BS	8	36″	914	144″	3658	239	108.4

EAGLE GROUP
100 Industrial Boulevard, Clayton, DE 19938-8903 USA
Phone: 302-653-3000 • Fax: 302-653-2065
www.eaglegrp.com
Foodservice Division: Phone 800-441-8440
MHC/Retail Display Divisions: Phone 800-637-5100

Printed in U.S.A.
©2008 by Eagle Group
Rev. 07/08

Spec sheets available for viewing, printing or downloading from our online literature library at *www.eaglegrp.com*

Although every attempt has been made to ensure the accuracy of the information provided, we cannot be held responsible for typographical or printing errors. Information and specifications are subject to change without notice. Please confirm at time of order.