Your Solutions Partner

Specifications

F.O.B Sedalia, Missouri 65301

E302

Approval Stamp(s):

PRODUCT INFORMATION:

PROJECT: _____

ITEM: _____

QUANTITY: _____

MODEL:

Aerohot™ Foodservice

Hot Food Units - Electric

❑	**E302/EP302**	2 top openings
❑	**E303/EP303**	3 top openings
❑	**E304/EP304**	4 top openings
❑	**E305/EP305**	5 top openings

TOP:

- 20 gauge, 300 Series stainless steel
- Die-stamped openings - 12" x 20"
- Poly carving board - 7"W x 1/2" thick with 18 gauge stainless steel support shelf and die-stamped brackets

HEAT COMPARTMENTS:

- Each with die-formed 8" deep galvanized liner
- Insulated with 1" thick fiberglass or equal, all four sides and bottom
- Single phase standard

BODY AND INTERIOR SHELF:

- 20 gauge, 430 Series stainless steel body
- 20 gauge, 430 Series stainless steel undershelf
- 430 Series stainless steel tubular legs with adjustable plastic feet

ELECTRICAL INFORMATION:

- ❑ 500 or 750 watt dome-type element for each compartment
- ❑ Wired to operate on 120, 208 or 240 Volt
- ❑ Single or Three phase
- AC current
- Each section with infinite switch
- Permanently wired, 6' long cord and plug provided

OPTIONS:

- ❑ 3-phase wiring
- ❑ 1,000 watt elements
- ❑ Stainless steel heat compartment liner
- ❑ Drop type brackets for cutting board
- ❑ Stainless steel feet
- ❑ Adapter plates
- ❑ Insets/Inset Covers
- ❑ Spillage pans
- ❑ Dish Shelf
- ❑ Trayslides & Workshelves
- ❑ Foodshields

AGENCY LISTINGS:

CLASSIFIED UL EPH c UL US LISTED

DUKE MANUFACTURING CO.
2305 N. Broadway
St. Louis, MO 63102

800.735.3853 Toll Free
314.231.5074 Fax
www.dukemfg.com

SHORT FORM SPECIFICATIONS:

Aerohot™ Foodservice - Hot Food - Electrical. 20 gauge tops w/ 300 series s/s body, under shelf and legs of heavy gauge 430 series s/s, 12"x 20" hot food wells w/exposed elements, 8" fully insulated galvanized liner, infinite controls, s/s top w/1/2" thick x 7" wide poly carving board, s/s open base w/under shelf, legs & feet. Portable units to have 5" dia. NSF approved swivel casters, 2 w/ locks, 6' cord & plug, 9" pusher bar.

"EP" - prefix on model number denotes portable unit.

A.I.A. File No. 35-C-13

Catalog No. AFS-ELECHOT

AEROHOT™ FOODSERVICE - HOT FOOD UNITS - ELECTRIC

Aerohot

MODEL:
Aerohot™ Foodservice
Hot Food Units - Electric

- ❑ **E302/EP302** 2 top openings
- ❑ **E303/EP303** 3 top openings
- ❑ **E304/EP304** 4 top openings
- ❑ **E305/EP305** 5 top openings

LEGEND
▲ - ELECTRICAL CONNECTION
"P" = prefix on model number denotes portable unit

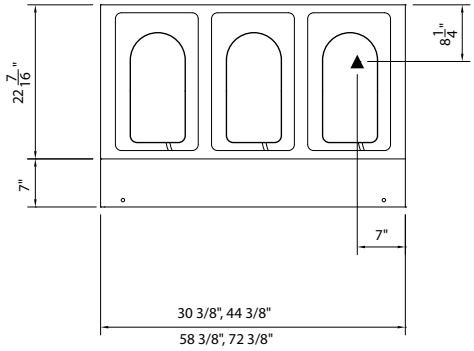

TOP VIEW

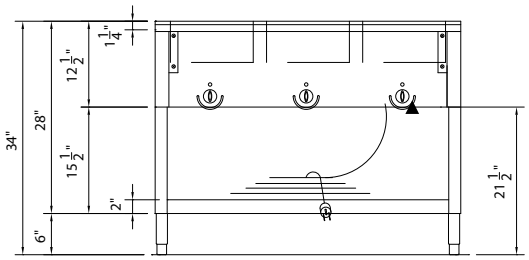

FRONT VIEW

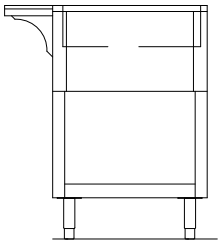

RIGHT SIDE VIEW

DIMENSIONS: (Consult factory for 3-phase electrical requirements and other options.) Freight Class: 85

Model	Length		Width		Height		Top Openings	Cube ft. Crated	Weight	
	in.	cm	in.	cm	in.	cm			lbs.	kg
E302/EP302	30-3/8	77.2	22-7/16	57.1	34	86.4	2	23.4	81/90	36.8/40.9
E303/EP303	44-3/8	112.8	22-7/16	57.1	34	86.4	3	32.5	107/114	48.6/51.8
E304/EP304	58-3/8	148.3	22-7/16	57.1	34	86.4	4	41.5	138/114	62.7/65.5
E305/EP305	72-3/8	183.9	22-7/16	57.1	34	86.4	5	50.5	165/172	75.0/78.2

ELECTRICAL SPECIFICATIONS: CONTACT FACTORY: Electric values & plug configurations change for 3 phase or when adding electric options.

Model	120 Volt - 500 watt elements			208 Volt - 750 watt elements			240 Volt - 750 watt elements		
	Watts	Amps	NEMA	Watts	Amps	NEMA	Watts	Amps	NEMA
E302/EP302	1000	8.3	5-15	1500	7.2	6-20	1500	6.3	6-20
E303/EP303	1500	12.5	5-15	2250	10.8	6-20	2250	9.4	6-20
E304/EP304	2000	16.7	L5-30	3000	14.4	6-20	3000	12.5	6-20
E305/EP305	2500	20.8	L5-30	3750	18.0	L6-30	3750	15.6	6-20

Cord and NEMA plug included

DUKE MANUFACTURING CO.
2305 N. Broadway
St. Louis, MO 63102

800.735.3853 Toll Free
800.231.1130 In Missouri
314.231.5074 Fax
www.dukemfg.com

Your Solutions Partner

Specification subject to change

05/11
Printed in U.S.A

© 2011, Duke Manufacturing Co.